F012 653 380

Stand Issue } 98-08-27

Fig./Abb. 1

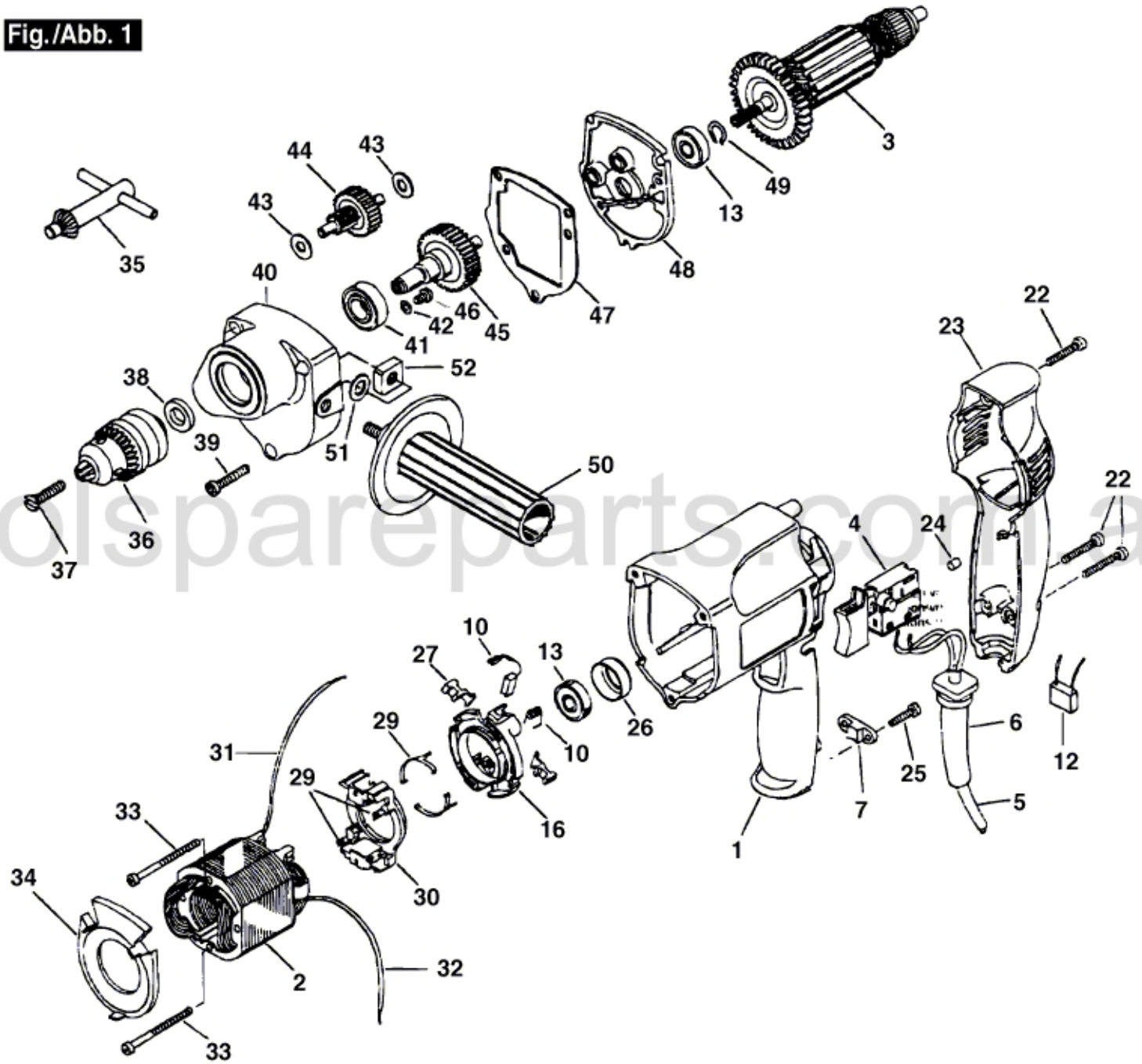

toolsparereparts.com.au